FUNC FLATSCREEN WM ST

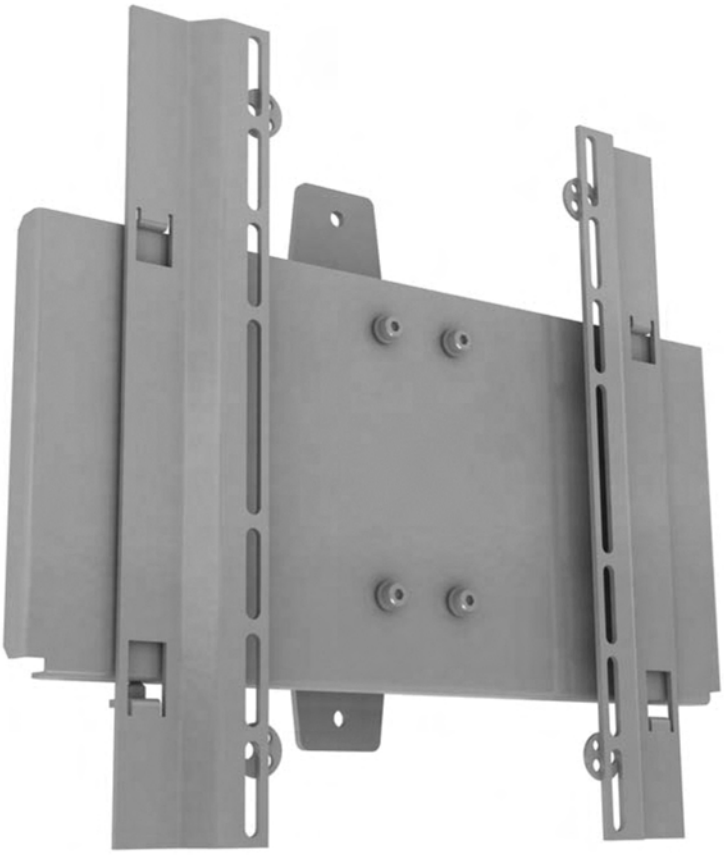

FUNC™
BY SMS

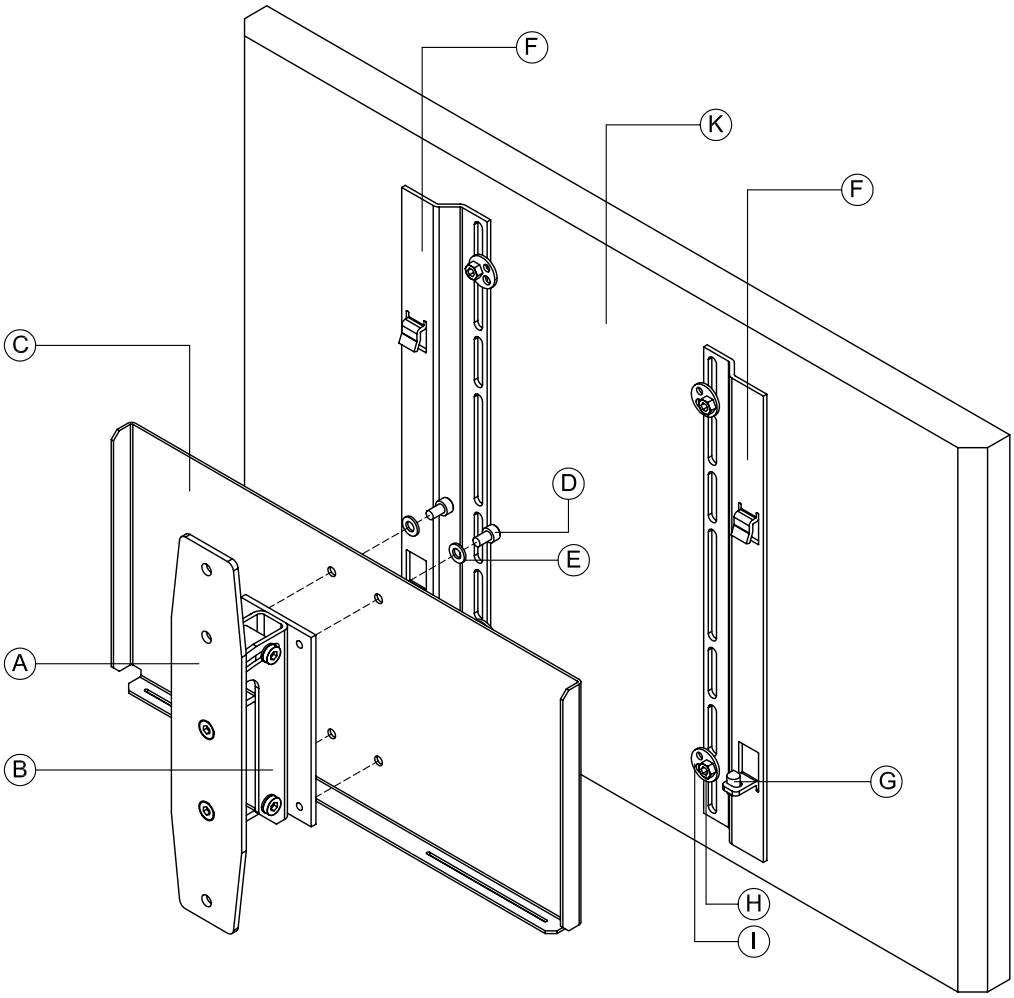

Contents				G.	Safety screws		2
A.	Wall plate		1	H.	Screws+washers kit		1
B.	Tilt & swivel		1	I.	Multiple washers		4
C.	Central Plate		1	J.	Allen Keys		3
D.	Screws M6X10		4				
E.	Washers 6,3		4	K.	Flat Screen (Not included)		
F.	Vertical plates		2	L.	Ceiling Screws&washers (Not included)		

1

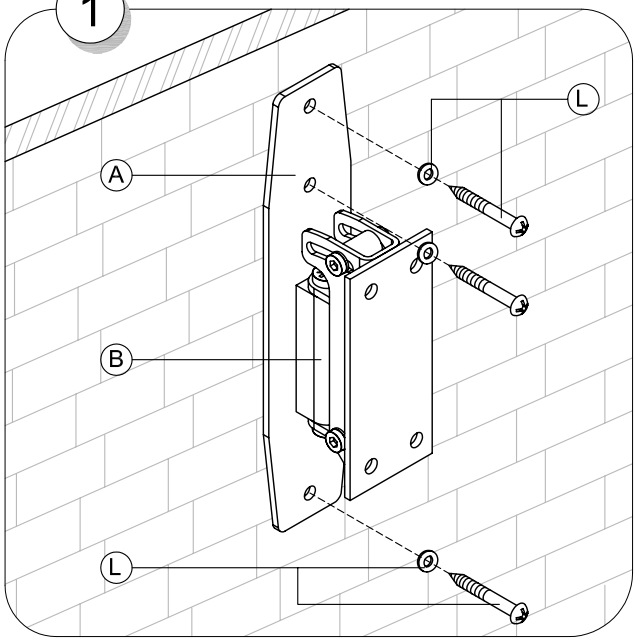

2

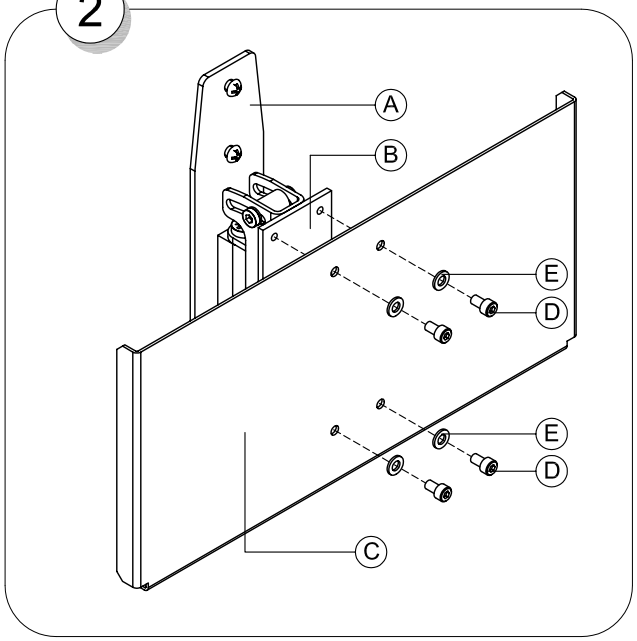

3

Alternative 1 for installing vertical plates

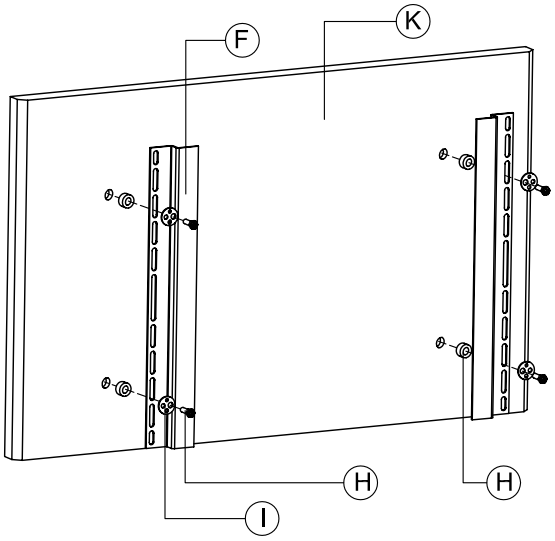

4

Alternative 2 for installing vertical plates

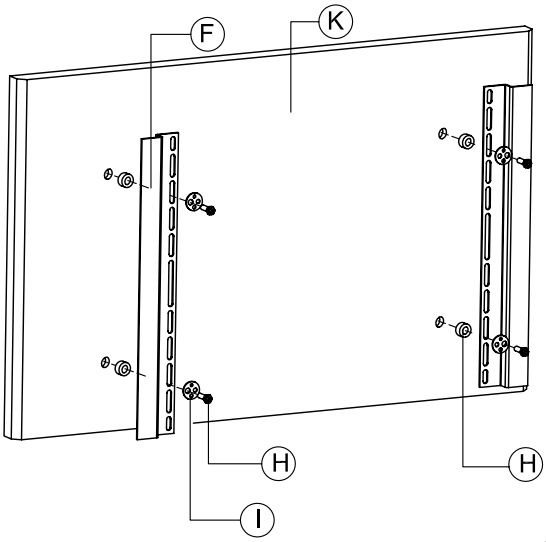

5

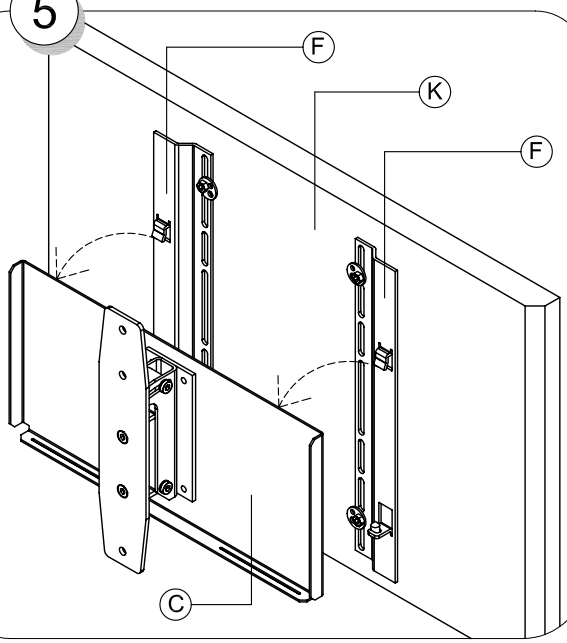

6

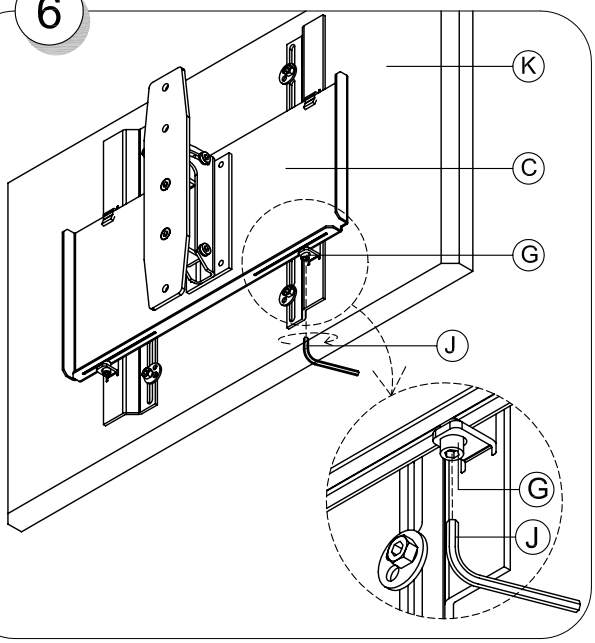

FUNC™
BY SMS

www.SmartMediaSolutions.se