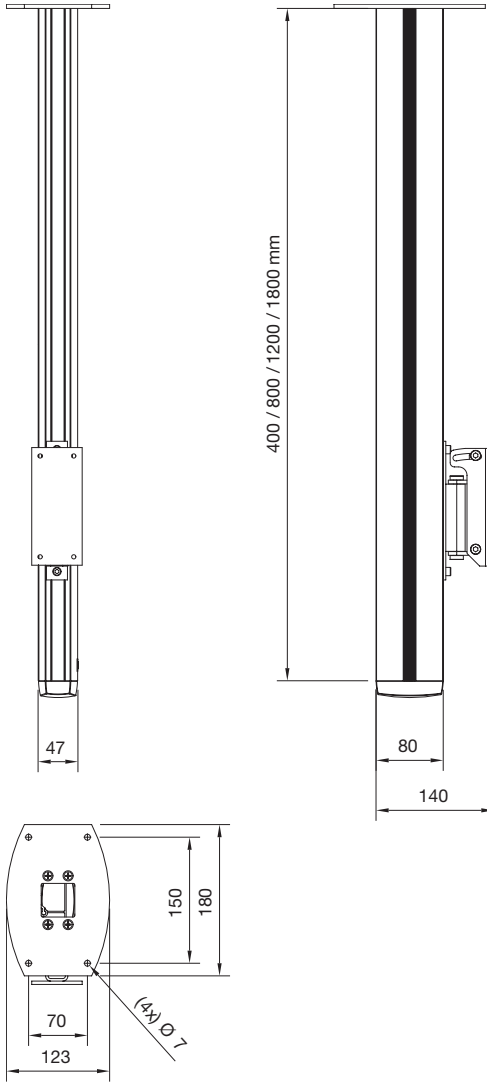

SMART MEDIA SOLUTIONS

www.SmartMediaSolutions.se